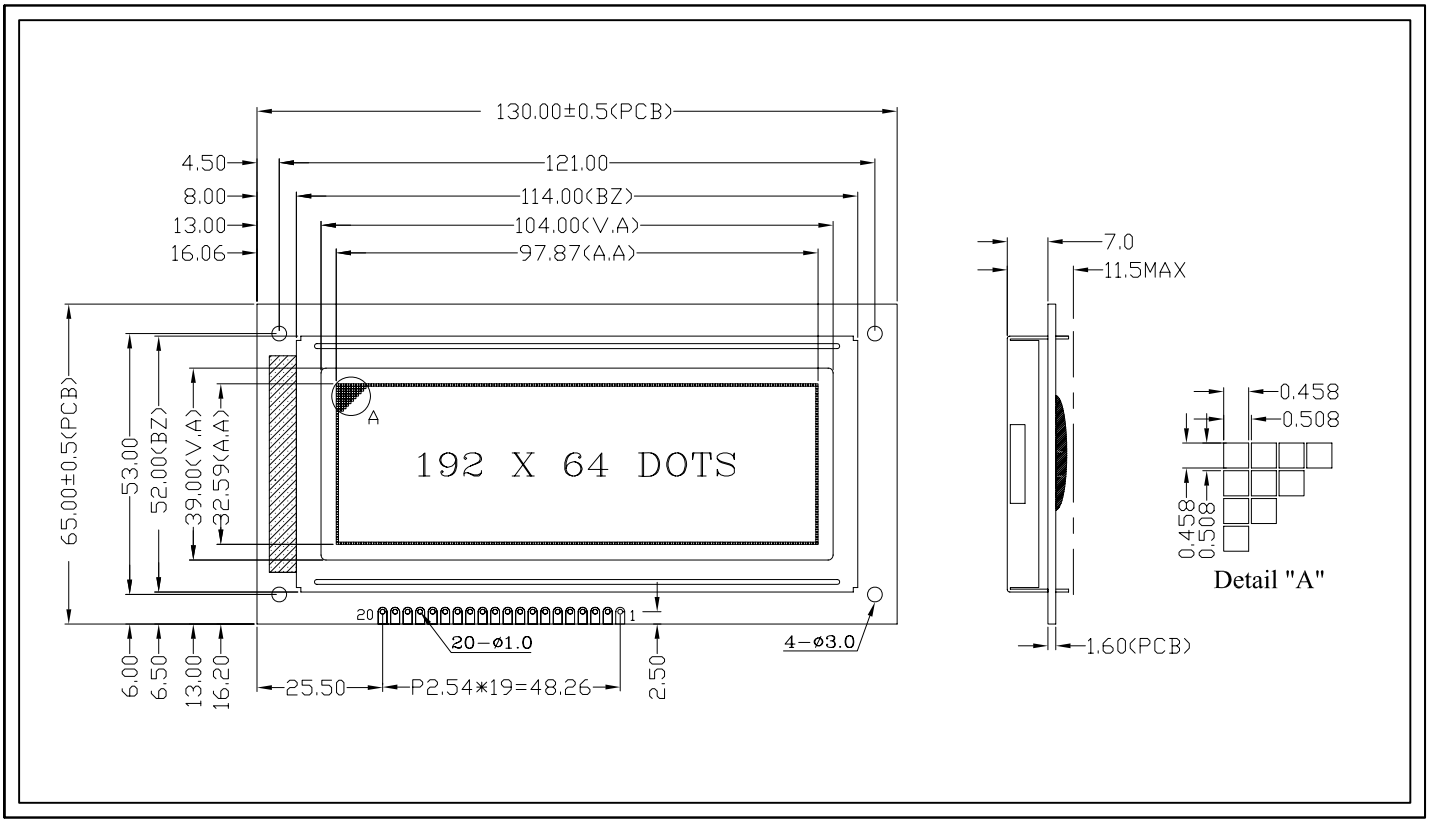

ITEM	SYMBOL	MIN.	MAX.	UNIT
POWER SUPPLY(VDD)	V_{DD}	-0.3	7.0	V
INPUT VOLTAGE	V_I	-0.3	VDD+0.3	V
OPERATING TEMP	Top	-20	+70	°C
STORAGE TEMP	Tst	-30	+80	°C

ITEM	STANDARD VALUE
Display Type	192 x 64 Dots
LCD Type	STN(Blue/Yellow-Green/Gray) ; FSTN
Drive Method	1/64Duty, 1/9Bias, VOP:12.0V
Viewing Angle	6 O'clock ; 12 O'clock
Backlight Color	White ; Yellow-Green
Control IC	S6B0108

Driver Diagram

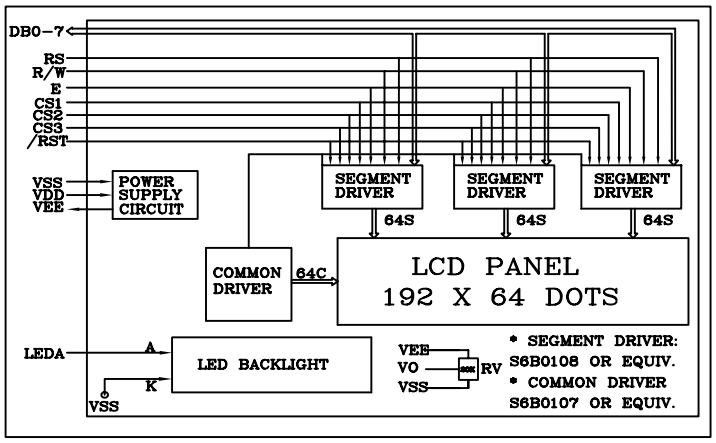

PIN DESCRIPTION			
PIN	SYMBOL	LEVEL	FUNCTION
1	VSS	0V	Ground
2	VDD	H	Power Supply For Logic
3	V0	--	Power Supply For LCD
4	RS	H/L	L:Instrction Code H:Data Code
5	RW	L	Read AND Write Signal
6	E	H	Chip Enable Signal
7-14	DB0-DB7	H/L	Data Bus
15	CS1	L	Chip 1 Select
16	RST	L	Reset Signal
17	CS2	L	Chip 2 Select
18	CS3	L	Chip 3 Select
19	VEE	--	Negative Voltage For LCD Driving
20	LEDA	H	Backlight anod

深圳市精诚显示技术有限公司

REVISION RECORD		DATE	Model No.: JM19264CC				
1			Part No.: SPEC-JM19264CC				VER.: A
2			DESIGNER	CHECKED	APPROVED	DATE	SHEET: 1/1
3							UNIT: mm