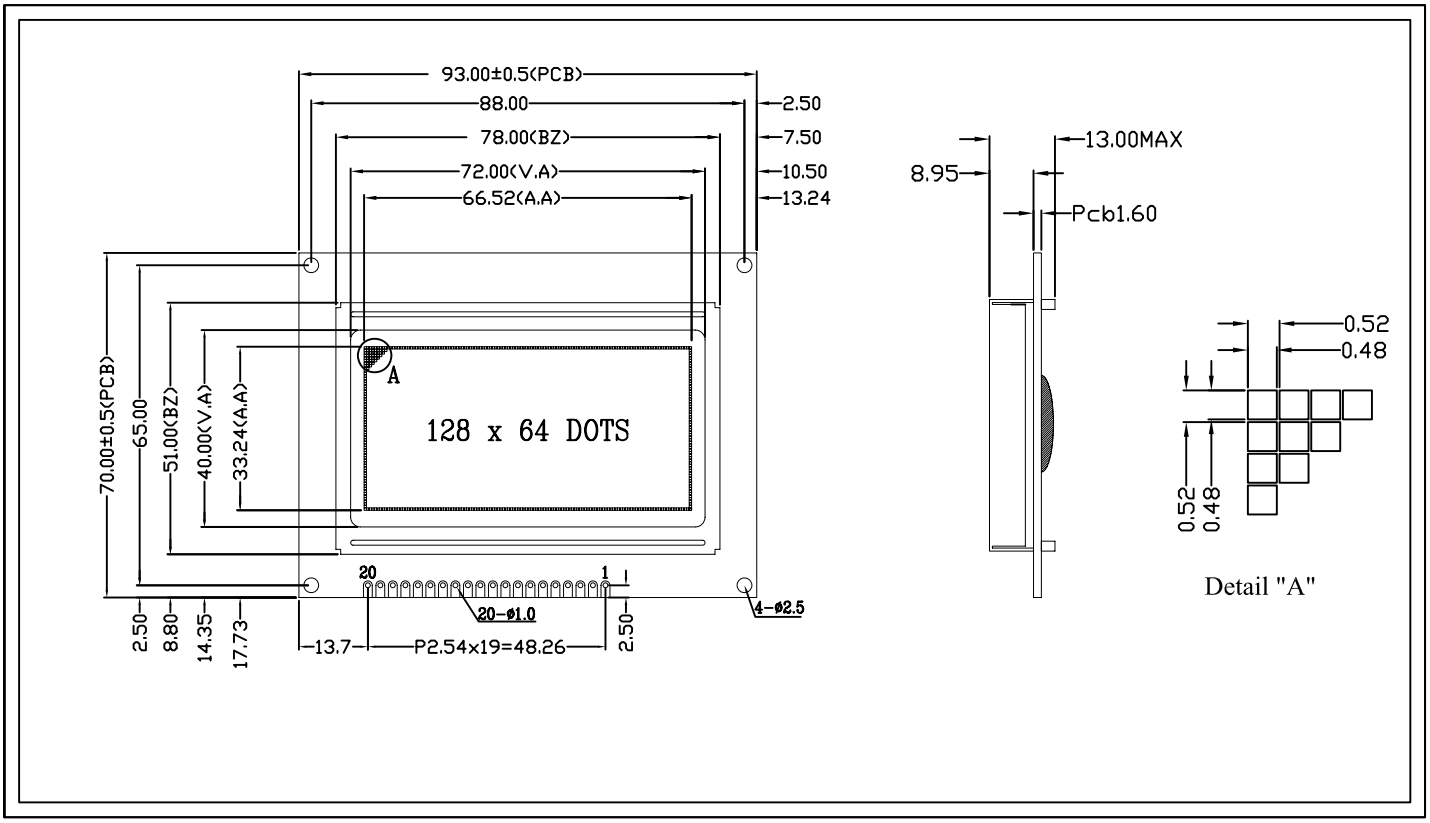

ITEM	SYMBOL	MIN.	MAX.	UNIT
POWER SUPPLY(VDD)	V_{DD}	-0.3	7.0	V
INPUT VOLTAGE	V_I	-0.3	VDD+0.3	V
OPERATING TEMP	Top	-20	+70	°C
STORAGE TEMP	Tst	-30	+80	°C

ITEM	STANDARD VALUE
Display Type	128 x 64 Dots
LCD Type	STN(Blue/Yellow-Green/Gray) ; FSTN
Drive Method	1/64Duty, 1/9Bias, VOP:5.0V
Viewing Angle	6 O'clock ; 12 O'clock
Backlight Color	White ; Yellow-Green
Control IC	ST7920

Driver Diagram

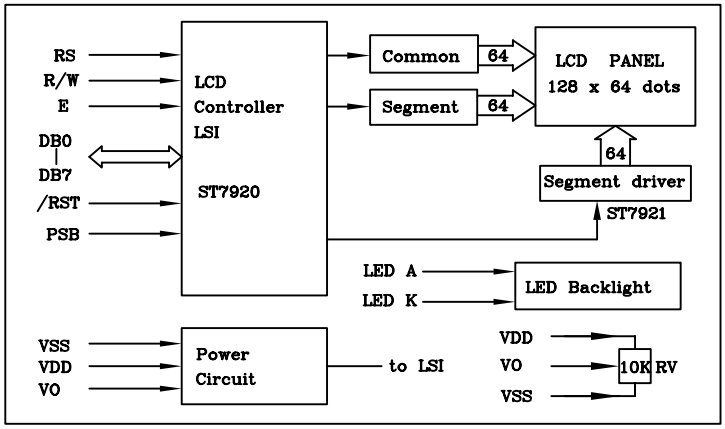

PIN DESCRIPTION			
PIN	SYMBOL	LEVEL	FUNCTION
1	VSS	0V	Ground
2	VDD	H	Power Supply For Logic
3	V0	--	Power Supply For LCD
4	RS/CS	H/L	H:Data; L:Instruction Code/Chip Select
5	RW/SID	H/L	H:Read; L:Write(parallel)/ Data(Serial)
6	E1/SCLK1	H/L	Enable Signal(Parallel)/Serial Clock
7-14	DB0-DB7	H/L	Data Bus
15	PSB	H/L	H:Parallel Mode; L:Serial Mode
16	NC	--	NC
17	RST	L	Reset Signal
18	NC	--	NC
19	LEDA	H	Backlight anod
20	LEDK	L	Backlight Negative

深圳市精诚显示技术有限公司

REVISION RECORD		DATE	Model No.: JM12864EC				
1			Part No.: SPEC-JM12864EC				VER.: A
2			DESIGNER	CHECKED	APPROVED	DATE	SHEET: 1/1
3							UNIT: mm