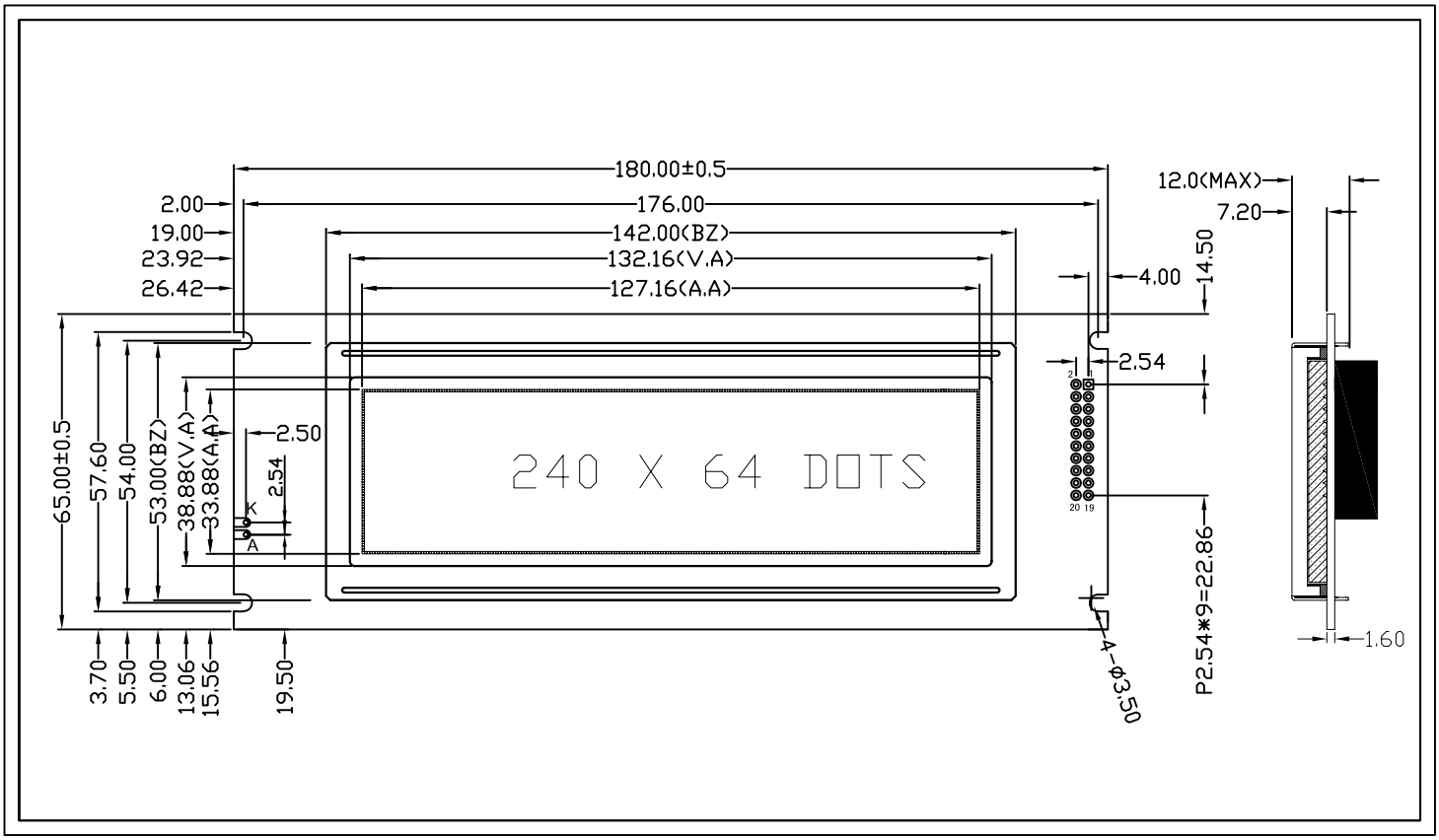

ITEM	SYMBOL	MIN.	MAX.	UNIT
POWER SUPPLY(VDD)	VDD	-0.3	7.0	V
INPUT VOLTAGE	Vi	-0.3	VDD+0.3	V
OPERATING TEMP	Top	-20	+70	°C
STORAGE TEMP	Tst	-30	+80	°C

ITEM	STANDARD VALUE
Display Type	240 x 64 Dots
LCD Type	STN(Blue/Yellow-Green/Gray) ; FSTN
Drive Method	1/64Duty, 1/9Bias, VOP12.0V
Viewing Angle	6 O'clock ; 12 O'clock
Backlight Color	White ; Yellow-Green
Control IC	T6963C/RA6963

Driver Diagram

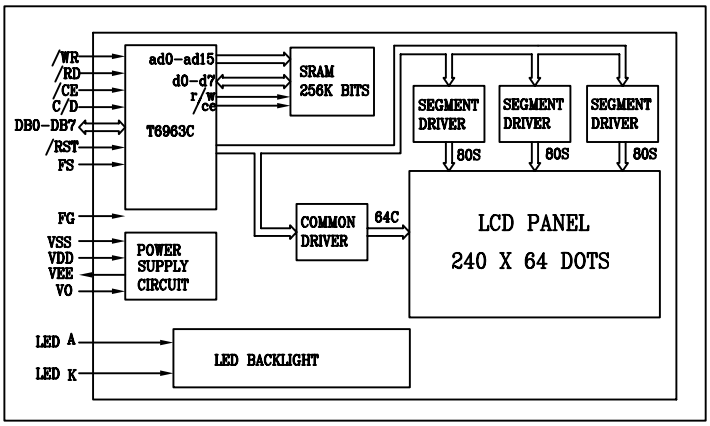

PIN DESCRIPTION			
PIN	SYMBOL	LEVEL	FUNCTION
1	FG	--	Frame Ground
2	VSS	0V	Ground
3	VDD	H	Power Supply For Logic
4	V0	--	Power Supply For LCD
5	/WR	L	Write Signal
6	/RD	L	Read Signal
7	/CE	L	Chip Enable Signal
8	C/D	H/L	H:Instrction Code L:Data Code
9	NC	--	NC
10	/RST	L	Reset Signal
11-18	DB0-DB7	H/L	Data Bus
19	FS	H/L	Font Selection(H:6X8dots L:8X8dots)
20	VEE	--	Negative Voltage For LCD Driving

深圳市精诚显示技术有限公司

REVISION RECORD		DATE	Model No.: JM24064CC(30106131)				
1			Part No.: SPEC-JM24064CC			VER.:	A
2			DESIGNER	CHECKED	APPROVED	DATE	SHEET: 1/1
3						UNIT:	mm